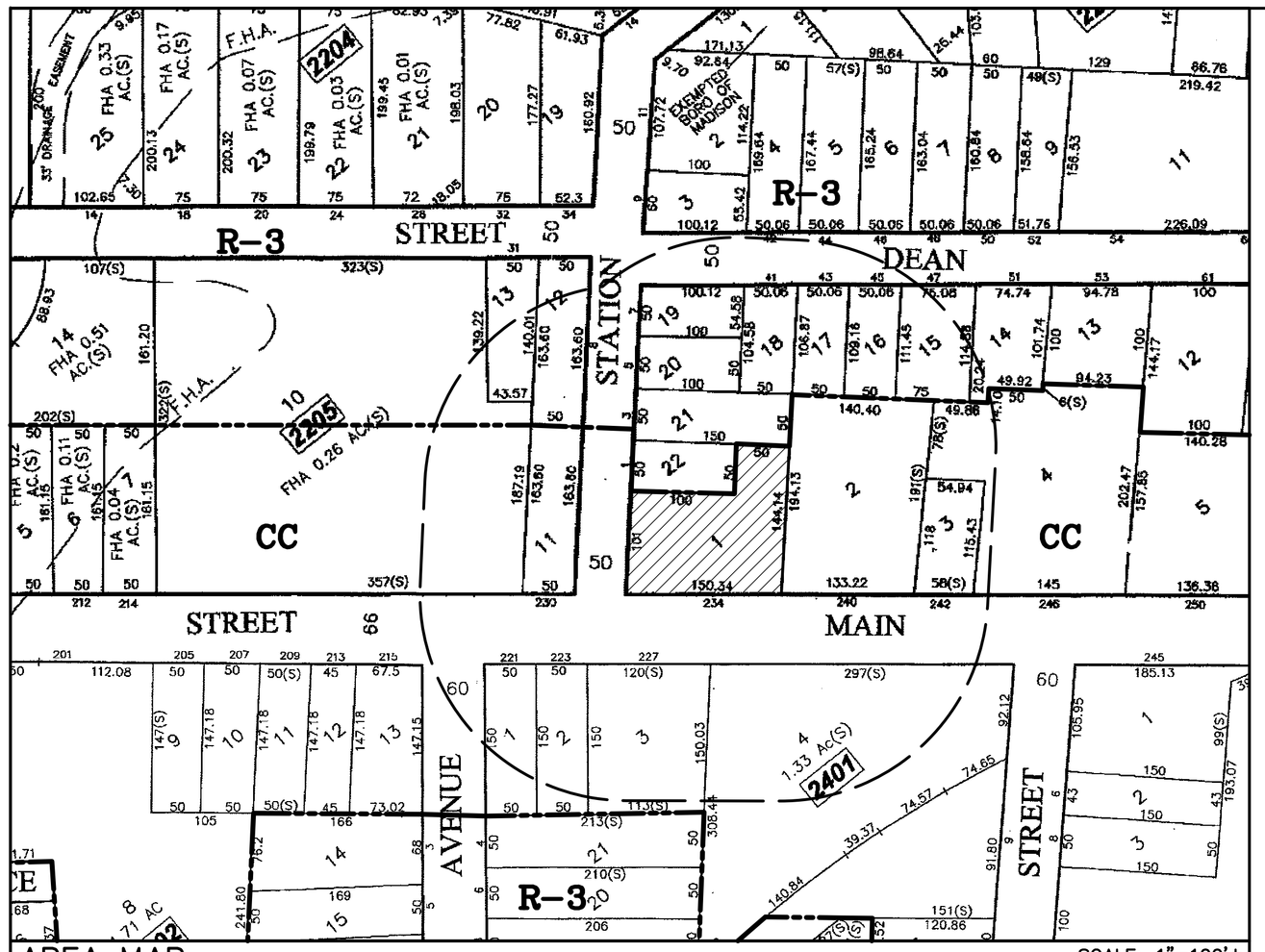

AREA MAP

REFERENCE: TAX MAPS OF THE BOROUGH OF MADISON. SHEETS --

SCALE: 1"=100'±

BOROUGH OF MADISON 200' OWNER LIST (12/06/19)

BLOCK	LOT	OWNER/ADDRESS	BLOCK	LOT	OWNER/ADDRESS
2205	10	WO MADISON LLC c/o THOMSON TAX & ACCT 1735 MARKET ST., SUITE A400 PHILADELPHIA, PA 19103	2206	19	CLAUDIO & JENNIFER DANZO 7 STATION ROAD MADISON, NJ 07940
	11	GROUP ASA AT 230 MAIN STREET, LLC 230 MAIN STREET MADISON, NJ 07940		20	PORFIRIO, N. (TRUST)/PORFIRIO, F. 5 STATION ROAD MADISON, NJ 07940
	12	ERMINA A. ROSSI 8 STATION ROAD MADISON, NJ 07940		21	DOUGLAS BENNETT & CRISTIN McKENNA 3 STATION ROAD MADISON, NJ 07940
	13	SHERRY, MARIE P./EDMOND G./BERNADETTE 31 DEAN STREET MADISON, NJ 07940		22	JOHN J. & LISA B. LEPIARZ P.O. BOX 674 MADISON, NJ 07940
2206	2	FRANCES A. MANTONE 282 WOODLAND ROAD MADISON, NJ 07940	2207	3	JUAN MORALES & DAWN M. STOS 9 STATION ROAD MADISON, NJ 07940
	3	FRANCES A. MANTONE 282 WOODLAND ROAD MADISON, NJ 07940		4	JAMES & PATRICIA FINELLI 42 DEAN STREET MADISON, NJ 07940
	4	FRANCES A., JERALD M, & SAMUEL MANTONE 282 WOODLAND ROAD MADISON, NJ 07940		5	MICHAEL & MARY CHIPOLETTI, REV. TRUST 44 DEAN STREET MADISON, NJ 07940
	14	PAUL ALVIN & JANET B. ALLOCCO 51 DEAN STREET MADISON, NJ 07940	2401	1	221 MAIN AT MADISON LLC 221 MAIN STREET MADISON, NJ 07940
	15	DONALD S. & KAREN E. GULBICKI 47 DEAN STREET MADISON, NJ 07940		2	KL REALTY HOLDINGS II LLC 68 N. FINLEY AVENUE BASKING RIDGE, NJ 07920
	16	VIVIAN M. LEE 45 DEAN STREET MADISON, NJ 07940		3	MAD SHP CNT-DUNKIN DONUTS/TAX 3WB 130 ROYALL ST., SUITE 100 CANTON, MA 02021
	17	JEFFREY C. KERR & DIEDRE BROWNE 43 DEAN STREET MADISON, NJ 07940		4	PLANET M.S.C., LLC P.O. BOX 285 OLD BRIDGE, NJ 08857
	18	ALBINA GUREVICH 115 OLD SHORT HILLS ROAD WEST ORANGE, NJ 07052			

UTILITIES & GOVERNMENTAL BODIES TO BE NOTIFIED:

PUBLIC SERVICE ELECTRIC AND GAS COMPANY
MANAGER – CORPORATE PROPERTIES
80 PARK PLAZA, T6B
NEWARK, NJ 07102

HOLLIS ODERSON, ENGINEERING DEPT.
CABLEVISION OF MORRIS
683 ROUTE 10 EAST
RANDOLPH, NJ 07869–3799

PAUL GROSSO, ROW DEPARTMENT
VERIZON OF NEW JERSEY–HIGHLANDS
290 W. MT. PLEASANT AVENUE–ROOM 40D2
LIVINGSTON, NJ 07039

N.J.D.O.T.
1035 PARKWAY AVENUE
CN 600
TRENTON, NJ 08625

JAMES MATTINA
MADISON ELECTRIC DEPARTMENT
40 STATION ROAD
MADISON, NJ 07940

TOM DeBIASSE
MADISON WATER DEPARTMENT
34 JOHN AVENUE
MADISON, NJ 07940

KEN O'BRIEN
MADISON DEPARTMENT OF PUBLIC WORKS
34 JOHN AVENUE
MADISON, NJ 07940

SITE DATA CHART

TAX LOT 1 IN BLOCK 2206
ZONE: CC (COMMUNITY COMMERCIAL ZONE)
AREA (TOTAL TRACT) 17,179 S.F. ±

OWNER: CHRINICAR REALTY, LLC
234 MAIN STREET
MADISON, NJ 07940

APPLICANT: BETZ'S AUTO REPAIRS, LLC
234 MAIN STREET
MADISON, NJ 07940

PROPOSED USE: AUTO REPAIR GARAGE (PUBLIC GARAGE)

DESCRIPTION	REQUIRED/ ALLOWED	EXISTING	PROPOSED	VARIANCE REQUIRED
MIN. LOT AREA	7,500 S.F.	17,149 S.F.	NO CHANGE	NO
MIN. LOT AREA WITHIN 150'	7,500 S.F.	17,149 S.F.	NO CHANGE	NO
MIN. LOT WIDTH	50 FT.	150.3 FT.	NO CHANGE	NO
MIN. LOT DEPTH	150 FT.	122.5 FT.	NO CHANGE	NO
MIN. FRONT YARD–MAIN ST.	7.5 FT.	44.4 FT.	NO CHANGE	NO
MIN. FRONT YARD–STATION	15 FT.	73.4 FT.	NO CHANGE	NO
MIN. SIDE YARD	5 FT.	17.7 FT.	NO CHANGE	NO
MIN. REAR YARD	15 FT.	23.4 FT.	NO CHANGE	NO
MAX. STORIES	2½ STORIES	1 STORY	NO CHANGE	NO
MAX. BUILDING HEIGHT	35 FT.	20 FT.±	NO CHANGE	NO
MIN. PARKING SPACES	9 SPACES	14 SPACES	NO CHANGE	NO
MAX. IMPERVIOUS COVERAGE	70% (12,004 S.F.)	58.6% (10,047 S.F.)	NO CHANGE	NO
MAX. PRINC. BLDG. COVERAGE	5,000 S.F.	1,547 S.F.	NO CHANGE	NO
MAX. FAR	0.25	0.09	NO CHANGE	NO

PARKING CALCULATIONS:

REPAIR GARAGE REQUIREMENTS: 3 SPACES REQUIRED PER BAY
REQUIRED PARKING: (3 BAYS) x (3 SPACES/BAY) = 9 SPACES

COVERAGE CALCULATIONS:

	EXISTING	CHANGE	EXISTING
PRINCIPAL BUILDING	1,547 S.F.	NO CHANGE	1,547 S.F.
SHED	0 S.F.	NEW	96 S.F.
WALKS/STEPS	270 S.F.	NO CHANGE	270 S.F.
PAVED DRIVEWAY/PARKING AREA	8,230 S.F.	NO CHANGE	8,134 S.F.
TOTAL COVERAGE	10,047 S.F.		10,047 S.F.

OTHER REQUESTED VARIANCES:

§195 ATTACHMENT 7, SCHEDULE IV – SIGN REGULATIONS:
SIZE OF LETTERS ON CANOPY SIGN (7" PROPOSED WHERE 6" PERMITTED)
SETBACK FROM RIGHT OF WAY (4' PROPOSED WHERE 10' ARE REQUIRED)
HEIGHT OF FREESTANDING SIGN (6.6' PROPOSED WHERE 4' IS PERMITTED)
SIZE OF FREESTANDING SIGN FACE (17.6 S.F. PROPOSED WHERE 6 S.F. IS PERMITTED)

§195–30.5.C.(3) ACCESSORY STRUCTURE LOCATION
5' SETBACK IS REQUIRED WHERE 3.5' IS PROPOSED

PREVIOUS SIGNAGE

REFERENCED FROM GOOGLE STREET VIEW 2013
NOT TO SCALE

BEST AVAILABLE INFORMATION FOR ORIGINAL SIGN SHOW APPROXIMATE SIGN DIMENSIONS OF 4'x6', WITH HEIGHT TO TOP OF SIGN AT APPROXIMATELY 11.5'–12' (BOTTOM OF SIGN AT APPX. 7.5'–8'). SIGN WAS INTERNALLY ILLUMINATED AND LETTER SIZES ARE APPROXIMATELY 8" AND 18".

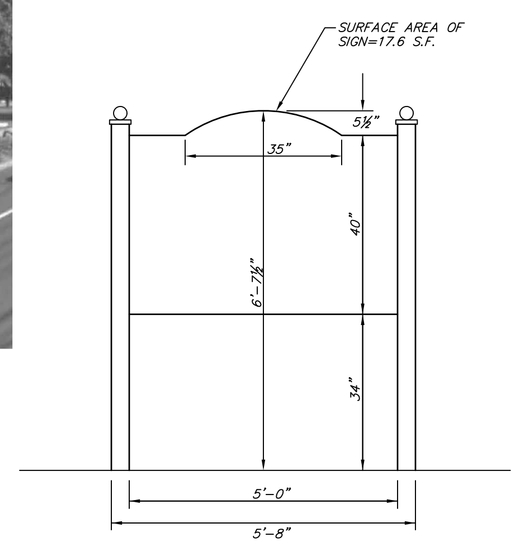

SIGN DIMENSIONS

SCALE: ½"=1'

CURRENT/PROPOSED SIGNAGE

REFERENCED FROM GOOGLE STREET VIEW 2018
NOT TO SCALE

SIGN GRAPHICS

SCALE: N.T.S.

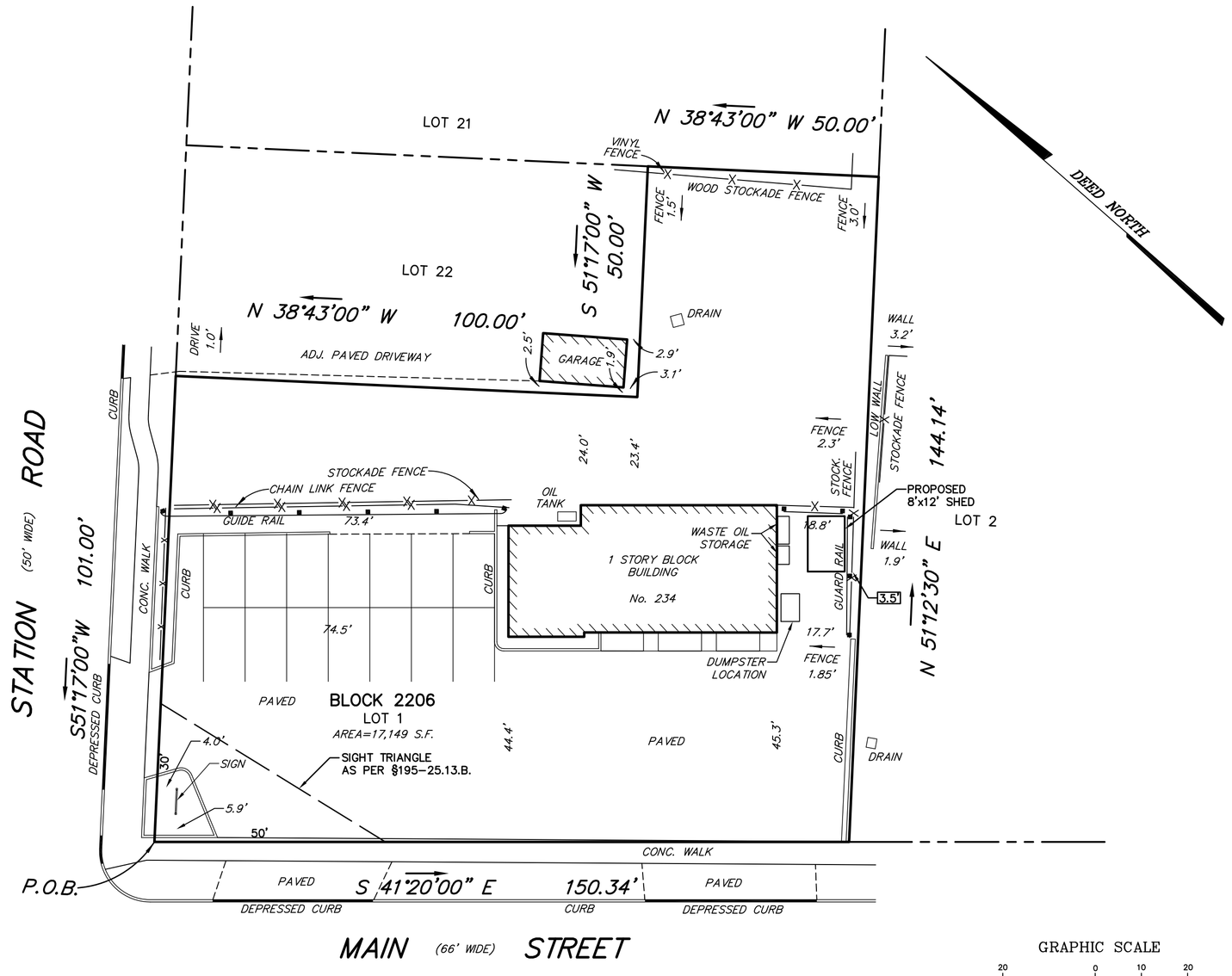

GRAPHIC SCALE
20 0 10 20
(IN FEET)
1 inch = 20 ft.

APPROVED BY THE PLANNING BOARD

CHAIRMAN DATE

SECRETARY DATE

BOROUGH ENGINEER DATE

NOTES:

1.) EXISTING CONDITIONS PLAN IS BASED ON A PLAN ENTITLED "SURVEY AND SIGN LOCATION, TAX LOT 1, BLOCK 2206, SITUATED IN THE BOROUGH OF MADISON, MORRIS COUNTY", PREPARED BY BENJAMIN AND WIZOREK, INC., AND DATED FEBRUARY 1, 2017. FIELD CONDITIONS WERE VERIFIED BY ABC SURVEYS, LLC ON OCTOBER 23, 2019.

APPLICATION No. P20–001

SITE PLAN

PREPARED FOR
BETZ'S AUTO REPAIRS
TAX LOT 1 BLOCK 2206
234 MAIN STREET
BOROUGH OF MADISON
MORRIS COUNTY NEW JERSEY

ABC SURVEYS, LLC
PROFESSIONAL LAND SURVEYING AND ENGINEERING
466 SOUTHERN BOULEVARD
CHATHAM, NEW JERSEY 07928
VOICE 973-377-2174 FAX 973-377-5533

ANDREW B. CLARKE–PLS,PE
NJ PROFESSIONAL ENGINEER AND LAND SURVEYOR LICENSE No. GB04105600

JOB No.: 18008
DES.: A.B.C.
SCALE: 1"=20'
DATE: 12/11/19

REVISED: 03/23/2020