OCU (WOOD GRAIN)
(W/O VIDEO DISPLAY)
PART#
BK9010FM.OCUWGND

STEEL SUPPORT NOTE:
STEEL CONTINGENT ON ENGINEERS SPEC. AND WIND LOAD REQUIREMENTS.
STEEL BASE PLATE w/STEEL ANCHOR BOLTS AND CONCRETE FOUNDATION.
ANCHOR BOLT OR DIRECT BURIAL FOUNDATION SHOULD BE PROVIDED BY ENGINEER FOR LOCAL WIND LOAD REQUIREMENTS.

COLOR NOTE:
REVEAL/SUPPORT STEEL: PAINT BURGER KING RED
CANOPY TOP: PAINT BURGER KING SILVER
CABINET FACE: W/3M DI-NOC WOODGRAIN VINYL PART # 1140EX
OCU CABINET FACE: PAINT BURGER KING SILVER
CABINET BACK: WOODGRAIN VINYL PART # 1140EX
OCU BOLT KIT: PAINT BURGER KING RED

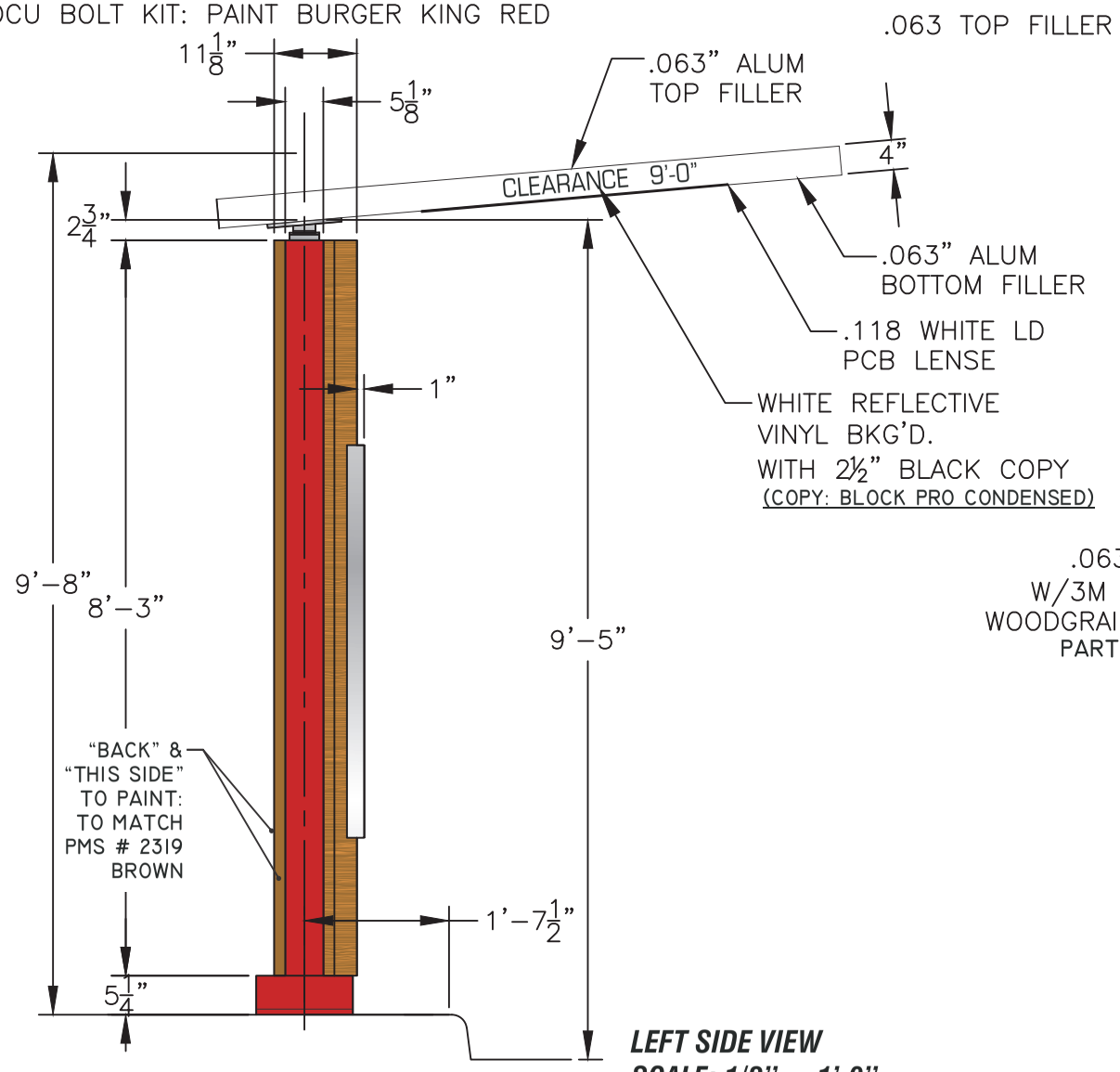

LEFT SIDE VIEW
SCALE: 1/2" = 1'-0"

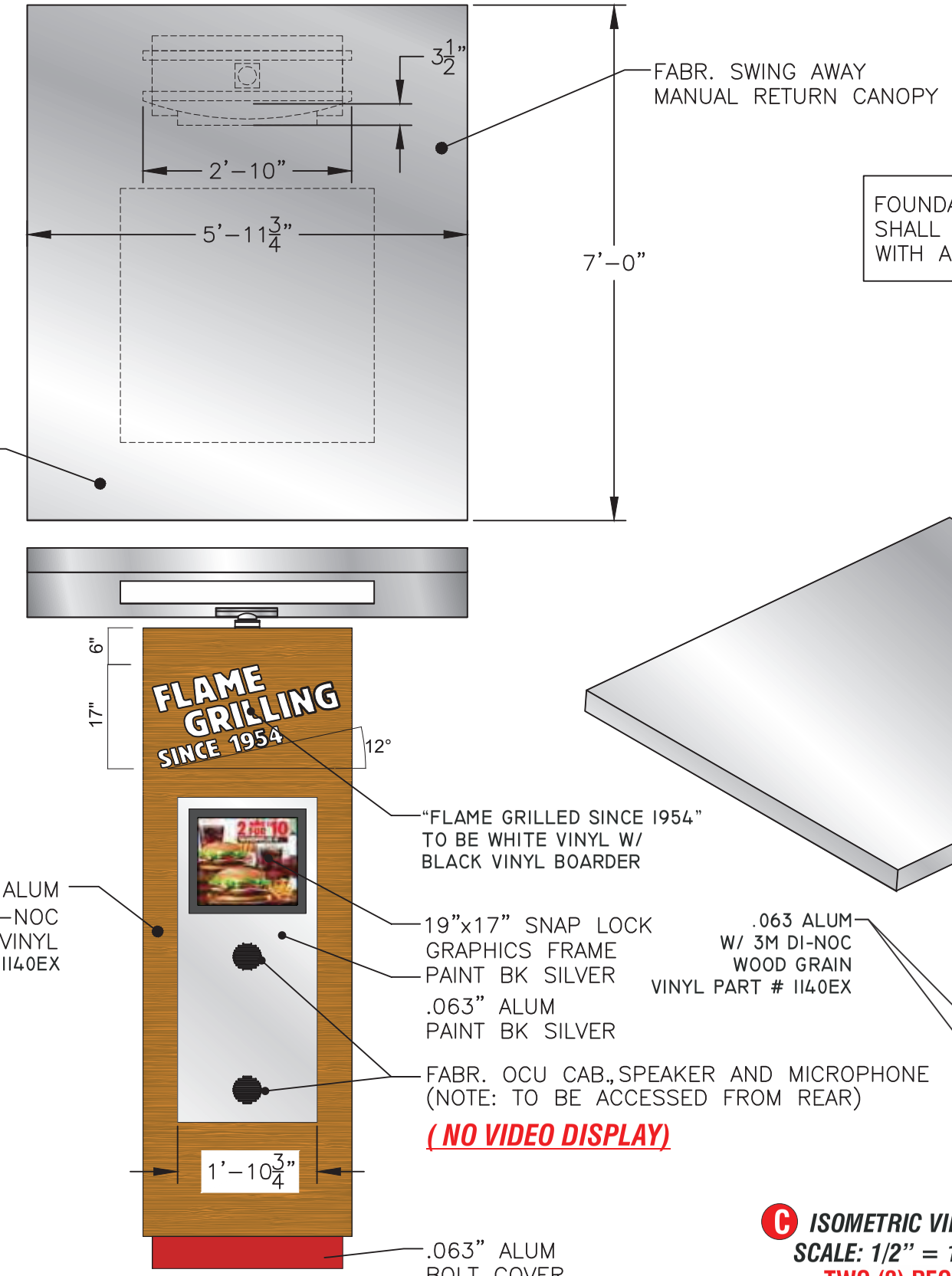

FRONT ELEVATION VIEW
SCALE: 1/2" = 1'-0"

FOUNDATIONS AND STRUCTURAL ELEMENTS SHALL BE CALCULATED IN COMPLIANCE WITH APPLICABLE CODES.

TAKE TO NOTE:

OCU (WOOD GRAIN)
(W/O VIDEO DISPLAY)
PART# *BK9010FM.OCUWGND*
(SPECIAL BUILD)

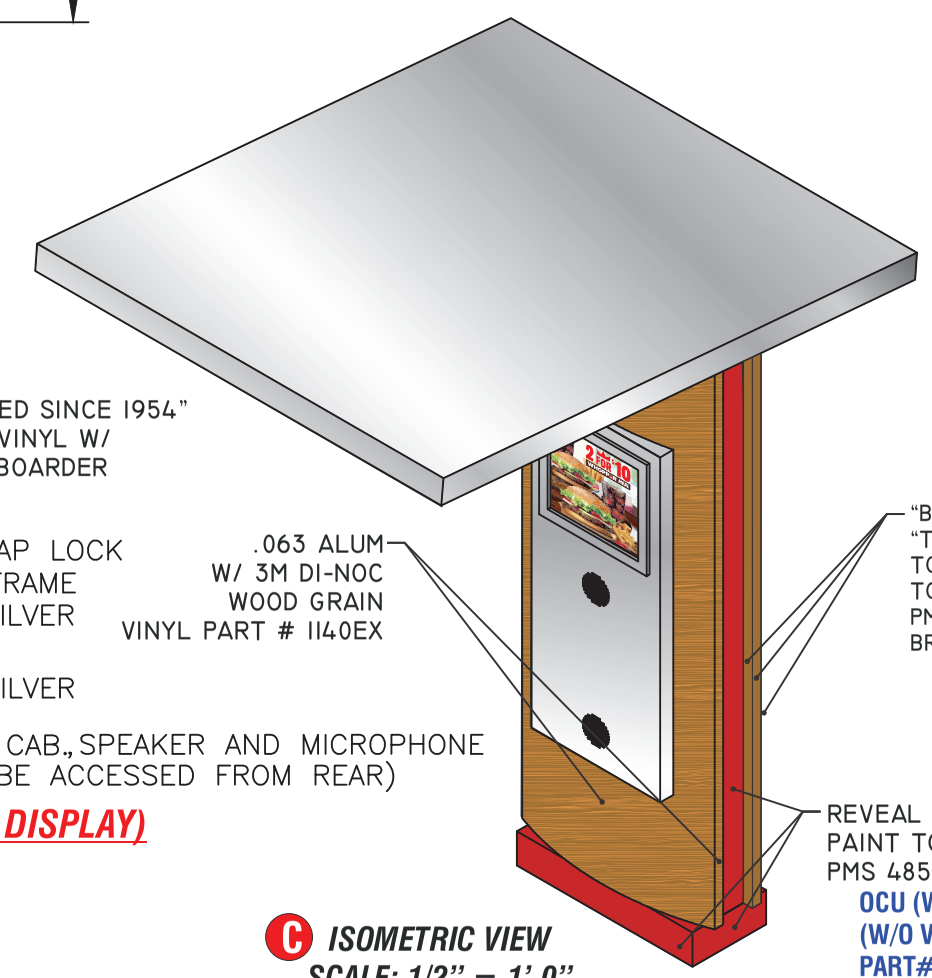

C ***ISOMETRIC VIEW***
SCALE: 1/2" = 1'-0"
TWO (2) REQ

OCU (WOOD GRAIN)
(W/O VIDEO DISPLAY)
PART#
BK9010FM.OCUWGND

FILE NAME: 2019_BK 9010FM.OCUWGNND(NO VIDEO DISPLAY)

FEDERAL HEATH
VISUAL COMMUNICATIONS
www.FederalHeath.com
12704 DuPont Circle Tampa, FL 33626
(813) 855-4415 (800) 284-3284 Fax (813) 854-3037

Manufacturing Facilities:
Oceanside, CA - Euless, TX - Jacksonville, TX
Delaware, OH - Racine, WI

Office Locations:
Oceanside, CA - Las Vegas, NV - Laughlin, AZ
Idaho Falls, ID - Euless, TX - Jacksonville, TX - San Antonio, TX
Houston, TX - Corpus Christi, TX - Indianapolis, IN
Louisville, KY - Knoxville, TN - Grafton, WI - Delaware, OH
Willowbrook, IL - Tunica, MS - Atlanta, GA
Tampa, FL - Daytona Beach, FL - Orlando, FL

Building Quality Signage Since 1901

Revisions:
R1 JCR 3/19/20 NEW SITE PLAN & ELEVATIONS
R2 JCR 3/20/20 ADD SIGN "F"
R3 JK 5/21/20 ADD ADDITIONAL SPECIFICATIONS FOR MONUMENT SIGN (F)
R4 JK 6/05/20 CONFIRM SIGN E IS TO SCALE AND NOTE.

Colors Depicted In This Rendering May Not Match Actual Finished Materials. Refer To Product Samples For Exact Color Match.

Client Approval/Date:
Landlord Approval/Date:

Account Rep: Fiona Paul
Project Manager: Jeremy Moore
Drawn By: Jesthan Delcano/CHC

Underwriters Laboratories Inc. — ELECTRICAL TO USE U.L. LISTED COMPONENTS AND SHALL MEET ALL N.E.C. STANDARDS
ALL ELECTRICAL SIGNS ARE TO COMPLY WITH U.L. 48 AND ARTICLE 600 OF THE N.E.C. STANDARDS, INCLUDING THE PROPER GROUNDING AND BONDING OF ALL SIGNS.

Project / Location:
Store#: 1366
317 MAIN ST
MADISON, NJ 07940

Job Number: 23-55534-10
Date: September 06, 2019
Sheet Number: 9 Of 16
Design Number: **23-55534-10 R4**

This original drawing is provided as part of a planned project and is not to be exhibited, copied or reproduced without the written permission of Federal Heath Sign Company, LLC or its authorized agent. © FHSC

STANDARD CLEARANCE BAR PART # BK9009FM.20 CLWG

NOTE:
CLADDING/ STEEL SUPPORT: STEEL CONTINGENT ON ENGINEERS SPEC. AND WIND LOAD REQUIREMENTS STEEL BASE PLATE W/STEEL ANCHOR BOLTS AND CONCRETE FOUNDATION

ANCHOR BOLT FOUNDATION SHOULD BE PROVIDED BY ENGINEER FOR LOCAL WIND LOAD REQUIREMENTS

CLEARANCE BAR CAN ONLY BE REMOVED WITH BKC APPROVAL

CLEARANCE BAR COLORS TO MATCH OCU PER LOCATION

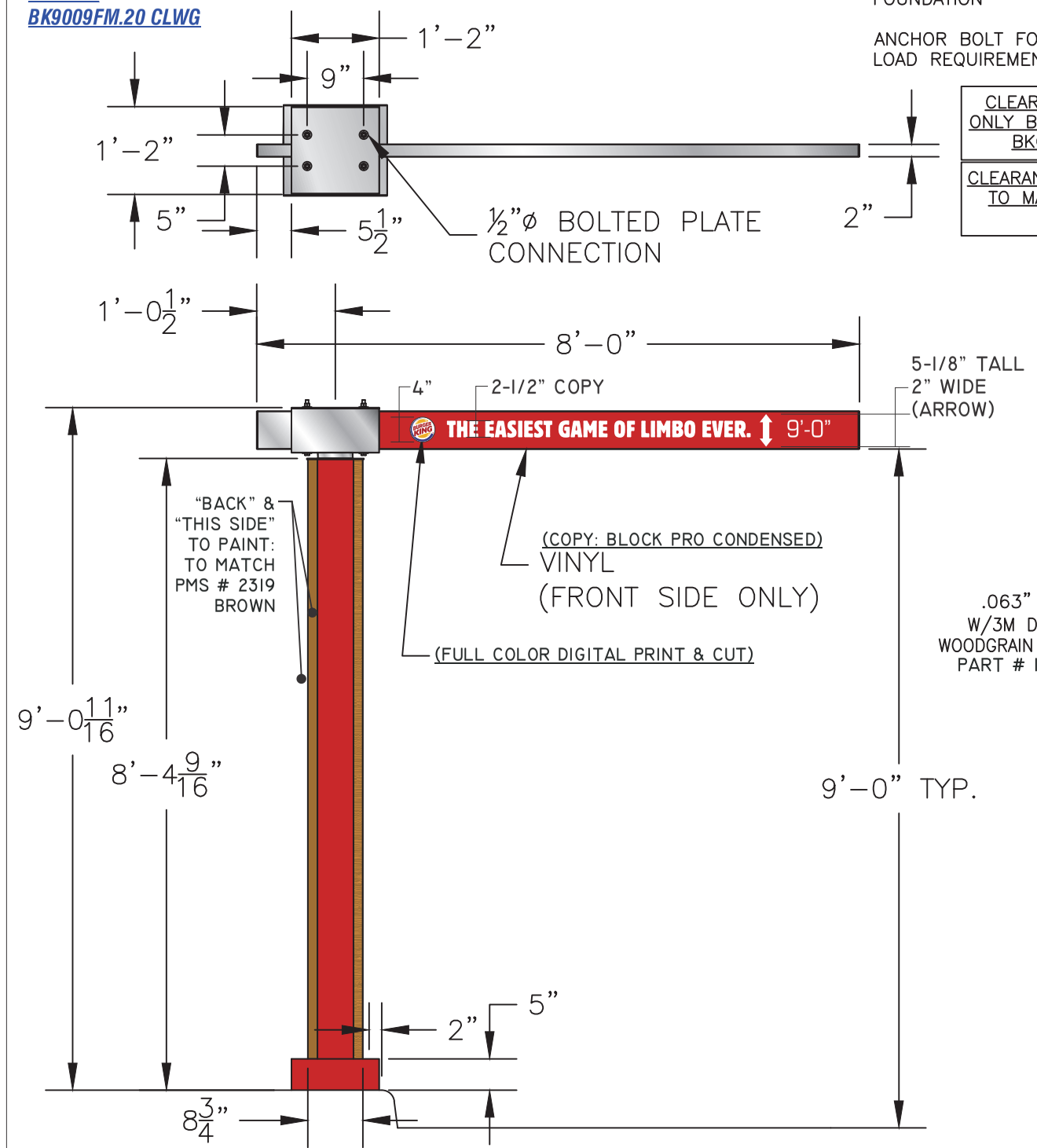

D **FRONT ELEVATION** TWO (2) REQ
SCALE: 1/2" = 1'-0"

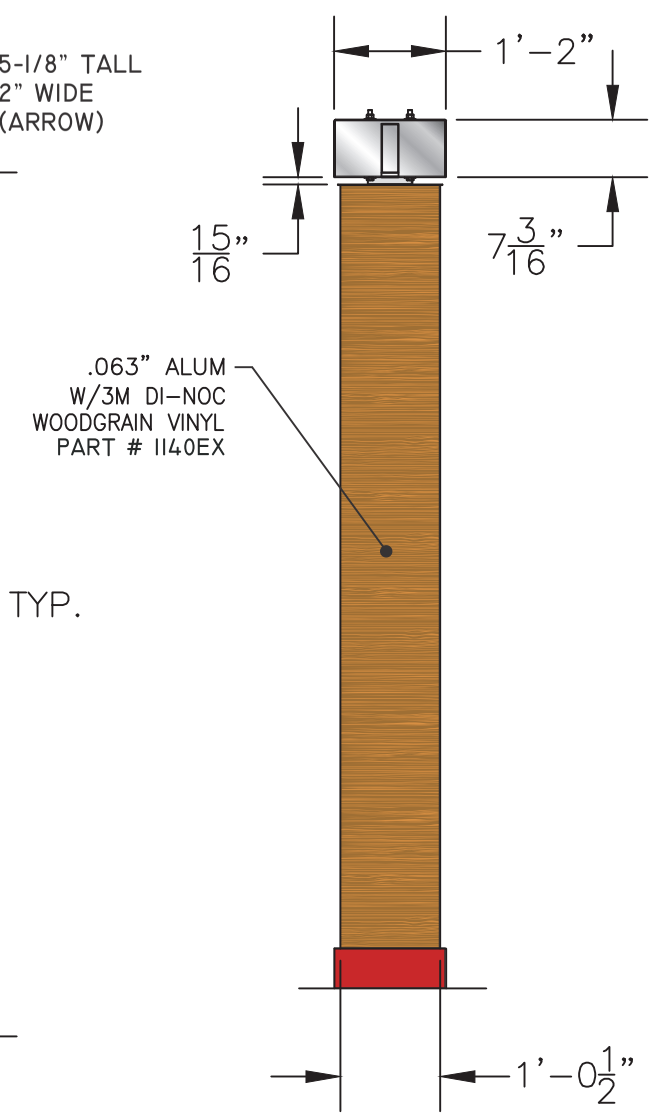

RIGHT SIDE VIEW
SCALE: 1/2" = 1'-0"

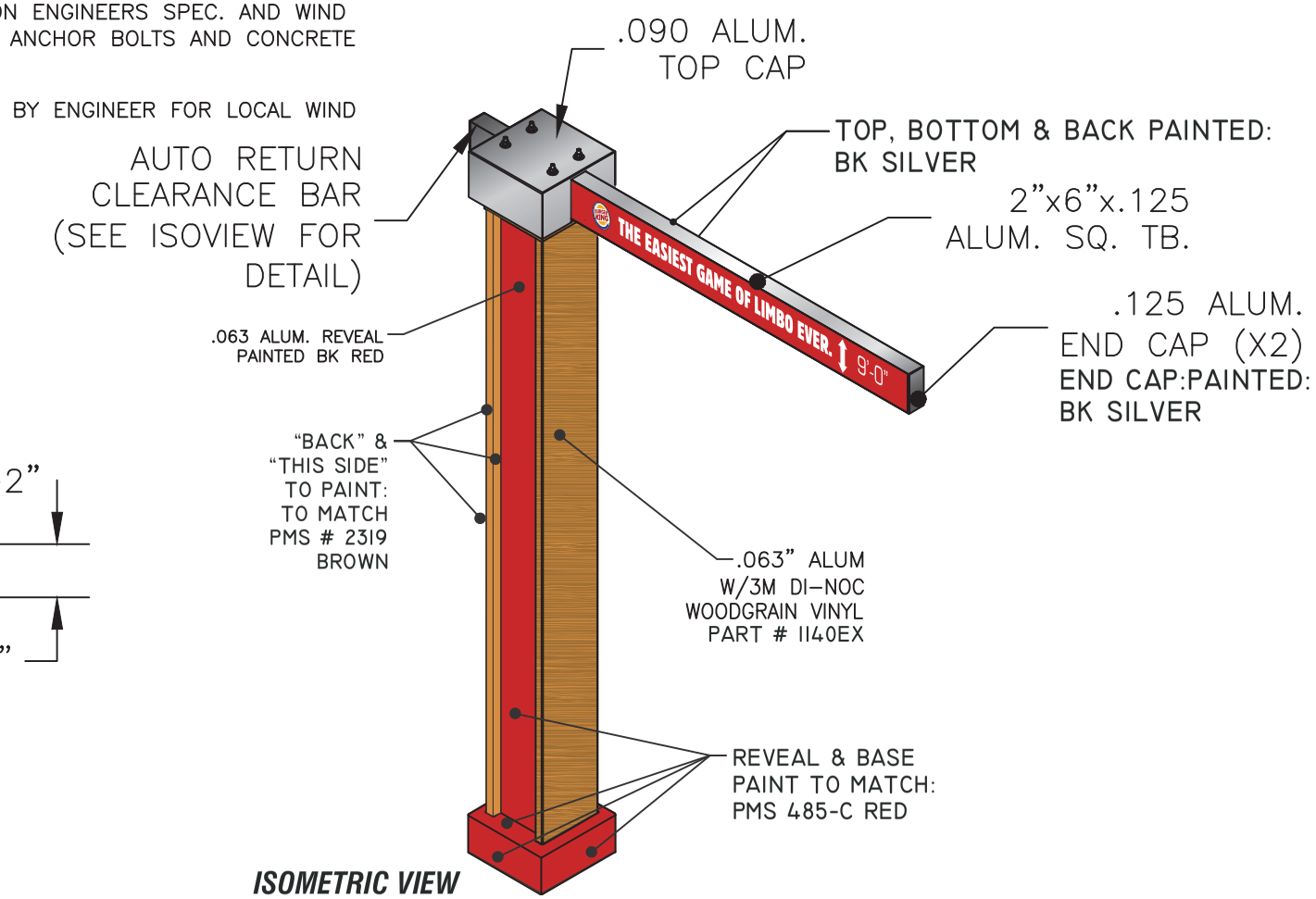

ISOMETRIC VIEW
SCALE: 1/2" = 1'-0"

COLOR NOTES:
FRONT PANEL: .063" ALUM
W/3M DI-NOC WOODGRAIN VINYL PART # 1140EX
BACK PANEL: WOODGRAIN VINYL PART # 1140EX
REVEAL: PAINT BK RED
CLEARANCE BAR: BRUSHED ALUM FINISH
w/REFLECTIVE SILVER VINYL (SIDES)
BASE: PAINT BK RED

Underwriters Laboratories, Inc. LISTED

STANDARD CLEARANCE BAR PART # BK9009FM.20 CLWG

FILE NAME: BK9009FM.20CLCLEARANCE BAR{UD_1_24_2019}.CDR

FEDERAL HEATH
VISUAL COMMUNICATIONS
www.FederalHeath.com
12704 DuPont Circle Tampa, FL 33626
(813) 855-4415 (800) 284-3284 Fax (813) 854-3037

Manufacturing Facilities:
Oceanside, CA - Euless, TX - Jacksonville, TX
Delaware, OH - Racine, WI

Office Locations:
Oceanside, CA - Las Vegas, NV - Laughlin, AZ
Idaho Falls, ID - Euless, TX - Jacksonville, TX - San Antonio, TX
Houston, TX - Corpus Christi, TX - Indianapolis, IN
Louisville, KY - Knoxville, TN - Grafton, WI - Delaware, OH
Willowbrook, IL - Tunica, MS - Atlanta, GA
Tampa, FL - Daytona Beach, FL - Orlando, FL

Building Quality Signage Since 1901

Revisions:
R1 JCR 3/19/20 NEW SITE PLAN & ELEVATIONS
R2 JCR 3/20/20 ADD SIGN "F"
R3 JK 5/21/20 ADD ADDITIONAL SPECIFICATIONS FOR MONUMENT SIGN (F)
R4 JK 6/05/20 CONFIRM SIGN E IS TO SCALE AND NOTE.

Colors Depicted In This Rendering May Not Match Actual Finished Materials. Refer To Product Samples For Exact Color Match.

Client Approval/Date:

Landlord Approval/Date:

Account Rep: Fiona Paul
Project Manager: Jeremy Moore
Drawn By: Jesthan Delcano/CHC

Underwriters Laboratories Inc. — ELECTRICAL TO USE U.L. LISTED COMPONENTS AND SHALL MEET ALL N.E.C. STANDARDS

ALL ELECTRICAL SIGNS ARE TO COMPLY WITH U.L. 48 AND ARTICLE 600 OF THE N.E.C. STANDARDS, INCLUDING THE PROPER GROUNDING AND BONDING OF ALL SIGNS.

Project / Location:
BURGER KING
Store#: 1366
317 MAIN ST
MADISON, NJ 07940

Job Number: 23-55534-10
Date: September 06, 2019
Sheet Number: 12 Of 16
Design Number: 23-55534-10 R4

This original drawing is provided as part of a planned project and is not to be exhibited, copied or reproduced without the written permission of Federal Heath Sign Company, LLC or its authorized agent. © FHSC

Drawing Type Art Creative
Customer Burger King
Project Description 1 X 3 Digital Drive-Thru Spec.
© 2018 LSI GRAPHIC SOLUTIONS

Drawn By: DL
Proj. Man.:
Date: 07/25/18
Proj. No.:

Note: 1) Housing Constructed of Aluminum Extrusion
2) Entire Board and Steel Powder Coat Black
MATERIALS: All Joints To Be Welded All Around
Grade A36 Steel Shapes
Grade A500 B Steel Tube

NOTE: MENU'S BY OTHERS

E MENU DISPLAYS

TWO(2) REQUIRED
scale 3/4"=1'-0"

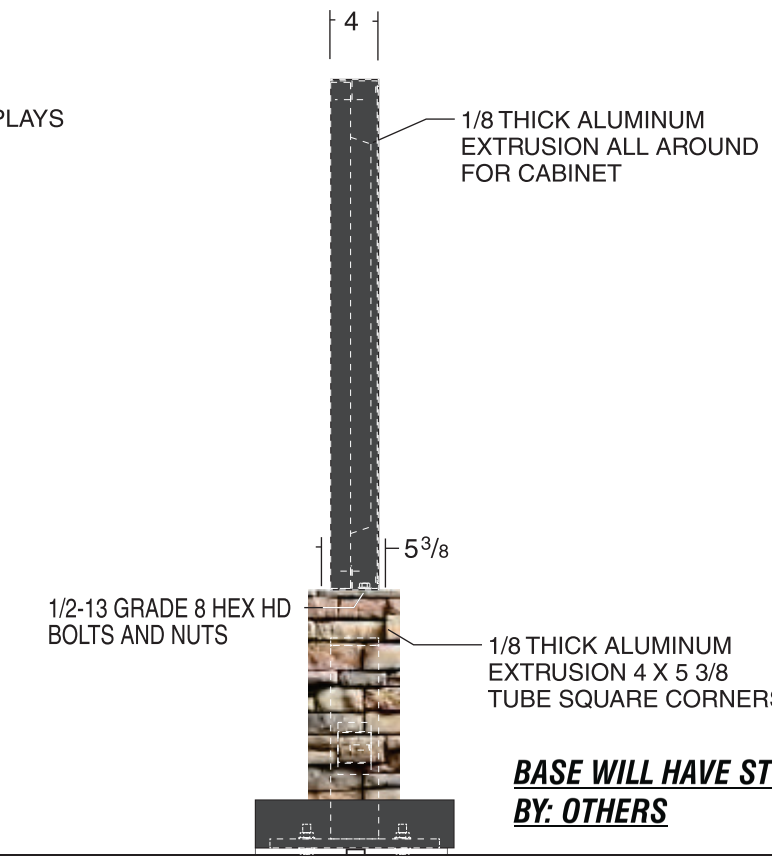

BASE WILL HAVE STONE WORK BY: OTHERS

★ Unit can be installed on existing foundation and anchor bolts, and if preferred can utilize the existing mounting steel base.
(This would require the data cables to be routed outside of the existing mounting steel.)

NOTE: The completed menu board is CUL / UL listed.

★ These are approximate foundation measurements.
The soil bearing capacity at the erection site must be considered when designing the foundation. The sign manufacturer is not able to predetermine the specific needs of each location. Consult a local engineer for design specifications.

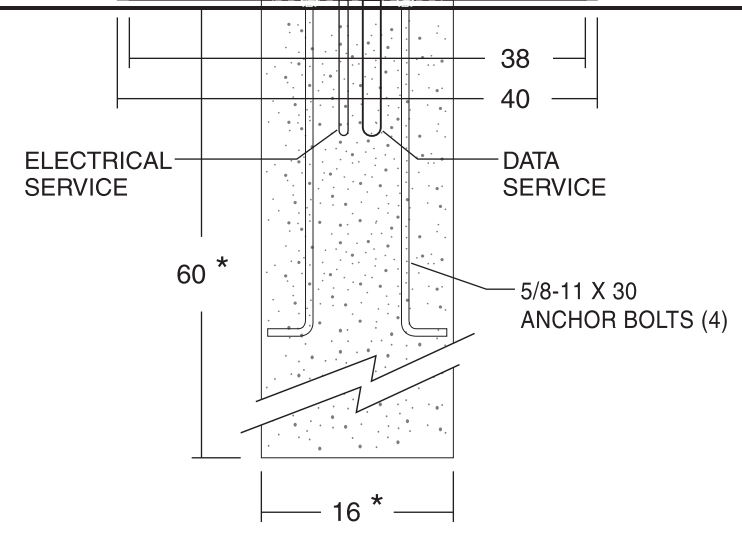

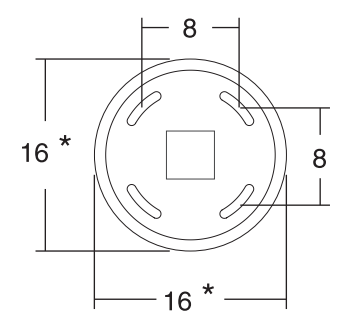

scale 3/4"=1'-0"

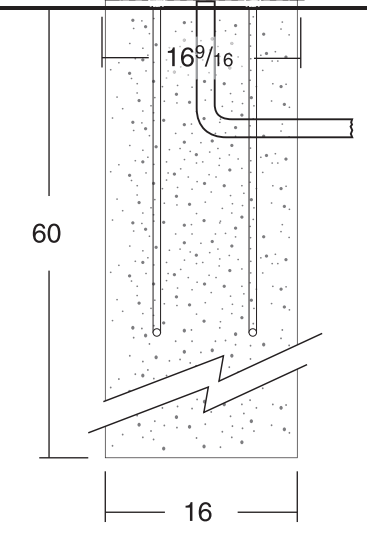

Electrical:
13.5 Amps @ 120 VAC 60 Hz

FEDERAL HEATH
VISUAL COMMUNICATIONS
www.FederalHeath.com
12704 DuPont Circle Tampa, FL 33626
(813) 855-4415 (800) 284-3284 Fax (813) 854-3037

Manufacturing Facilities:
Oceanside, CA - Euless, TX - Jacksonville, TX
Delaware, OH - Racine, WI

Office Locations:
Oceanside, CA - Las Vegas, NV - Laughlin, AZ
Idaho Falls, ID - Euless, TX - Jacksonville, TX - San Antonio, TX
Houston, TX - Corpus Christi, TX - Indianapolis, IN
Louisville, KY - Knoxville, TN - Grafton, WI - Delaware, OH
Willowbrook, IL - Tunica, MS - Atlanta, GA
Tampa, FL - Daytona Beach, FL - Orlando, FL

Building Quality Signage Since 1901

Revisions:
R1 JCR 3/19/20 NEW SITE PLAN & ELEVATIONS
R2 JCR 3/20/20 ADD SIGN "F"
R3 JK 5/21/20 ADD ADDITIONAL SPECIFICATIONS FOR MONUMENT SIGN (F)
R4 JK 6/05/20 CONFIRM SIGN E IS TO SCALE AND NOTE.

Colors Depicted In This Rendering May Not Match Actual Finished Materials. Refer To Product Samples For Exact Color Match.

Client Approval/Date:
Landlord Approval/Date:

Account Rep: Fiona Paul
Project Manager: Jeremy Moore
Drawn By: Jesthan Delcano/CHC

Underwriters Laboratories Inc. — ELECTRICAL TO USE U.L. LISTED COMPONENTS AND SHALL MEET ALL N.E.C. STANDARDS
ALL ELECTRICAL SIGNS ARE TO COMPLY WITH U.L. 48 AND ARTICLE 600 OF THE N.E.C. STANDARDS, INCLUDING THE PROPER GROUNDING AND BONDING OF ALL SIGNS.

Project / Location:
Store#: 1366
317 MAIN ST
MADISON, NJ 07940

Job Number: 23-55534-10
Date: September 06, 2019
Sheet Number: 15 Of 16
Design Number: 23-55534-10 R4

This original drawing is provided as part of a planned project and is not to be exhibited, copied or reproduced without the written permission of Federal Heath Sign Company, LLC or its authorized agent. © FHSC

DESIGN INTENT ONLY
ENGINEERING REQUIRED TO DETERMINE ACTUAL MANUFACTURING & INSTALLATION REQUIREMENTS

S-12B Roadside Monument
8'-0" OAH Illuminated Double Face
Revised 06/20/2013

COLOR NOTES:
ILLUM. REVEAL: .125 RED PCB
RND CAB. FILLER/ RETAINER:
PAINT BRUSHED ALUM. SILVER
RETAINER/EXPOSED LENS RETAINER:
PAINT PMS 2319 (BROWN)
MON FACE PANEL: .090" ALUM

LOGO FACE: .093 CLEAR PCB
BUN LOGO: 3M 3630-125 YELLOW
ACCENT RING: 3M 3630-8703 BLUE
COPY/ RTM: 3M 3630-33 RED
BKG'D/ BUN ACCENT: 3M 3635-30
WHITE DIFFUSER
VINYL TO BE APPLIED 2nd SURFACE

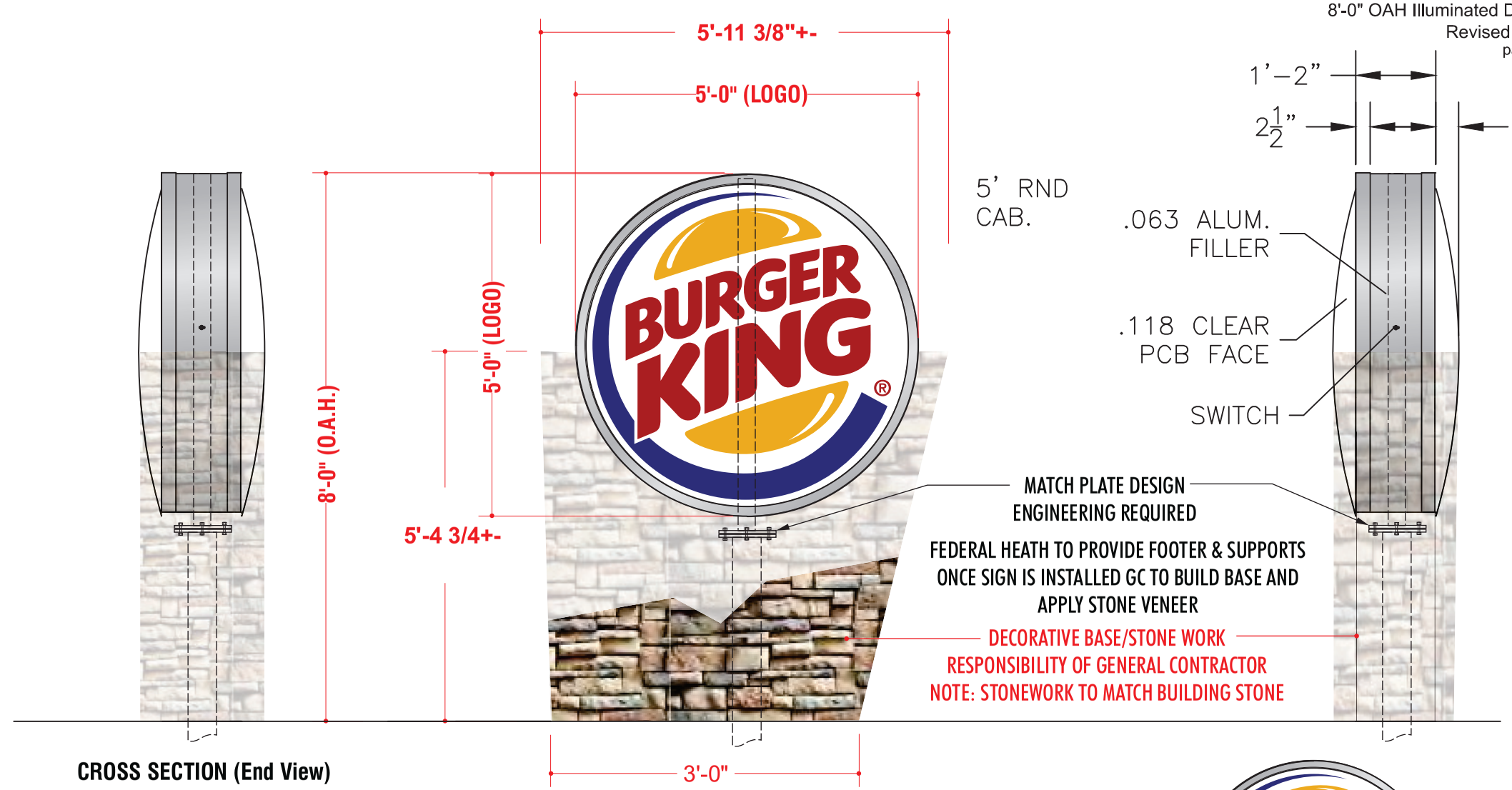

CROSS SECTION (End View)

F **DOUBLE FACED INTERNALLY ILLUMINATED MONUMENT SIGN**
scale 1/4"=1'-0"

LOGO
19.6 SQUARE FEET

ELECTRICAL NOTE—ACTUAL # OF CIRCUITS TO BE DETERMINED BY A LICENSED ELECTRICAL CONTRACTOR.
TOTAL AMPS: 1.1
OF CKTS: 1 @ 20 AMP(RECOMMENDED)
VOLTS: 120
ELECTRICAL CONNECTION AS FOLLOWS:
GREEN TO GREEN (GROUND), WHITE TO WHITE (NEUTRAL), BLACK TO BLACK (POWER)
ALL SIGNAGE WILL BE (U.L.) LISTED, (U.L.) 2161 COMPLIANT AND CARRY (U.L) LABELS.

*NOTE:
INSTALL TOGGLE SWITCH TO OPERATE (ON/OFF) IN THE HORIZONTAL POSITION.

OPPOSITE SIDE

FEDERAL HEATH
VISUAL COMMUNICATIONS
www.FederalHeath.com
12704 DuPont Circle Tampa, FL 33626
(813) 855-4415 (800) 284-3284 Fax (813) 854-3037

Manufacturing Facilities:
Oceanside, CA - Euless, TX - Jacksonville, TX
Delaware, OH - Racine, WI

Office Locations:
Oceanside, CA - Las Vegas, NV - Laughlin, AZ
Idaho Falls, ID - Euless, TX - Jacksonville, TX - San Antonio, TX
Houston, TX - Corpus Christi, TX - Indianapolis, IN
Louisville, KY - Knoxville, TN - Grafton, WI - Delaware, OH
Willowbrook, IL - Tunica, MS - Atlanta, GA
Tampa, FL - Daytona Beach, FL - Orlando, FL

Building Quality Signage Since 1901

Revisions: R1 JCR 3/19/20 NEW SITE PLAN & ELEVATIONS
R2 JCR 3/20/20 ADD SIGN "F"
R3 JK 5/21/20 ADD ADDITIONAL SPECIFICATIONS FOR MONUMENT SIGN (F)
R4 JK 6/05/20 CONFIRM SIGN E IS TO SCALE AND NOTE.

Colors Depicted In This Rendering May Not Match Actual Finished Materials. Refer To Product Samples For Exact Color Match.

Client Approval/Date:
Landlord Approval/Date:

Account Rep: Fiona Paul
Project Manager: Jeremy Moore
Drawn By: Jesthan Delcano/CHC

Underwriters Laboratories Inc. — ELECTRICAL TO USE U.L. LISTED COMPONENTS AND SHALL MEET ALL N.E.C. STANDARDS
ALL ELECTRICAL SIGNS ARE TO COMPLY WITH U.L. 48 AND ARTICLE 600 OF THE N.E.C. STANDARDS, INCLUDING THE PROPER GROUNDING AND BONDING OF ALL SIGNS.

Project / Location:
Store#: 1366
317 MAIN ST
MADISON, NJ 07940

Job Number: 23-55534-10
Date: September 06, 2019
Sheet Number: 16 Of 16
Design Number: **23-55534-10 R4**

This original drawing is provided as part of a planned project and is not to be exhibited, copied or reproduced without the written permission of Federal Heath Sign Company, LLC or its authorized agent. © FHSC