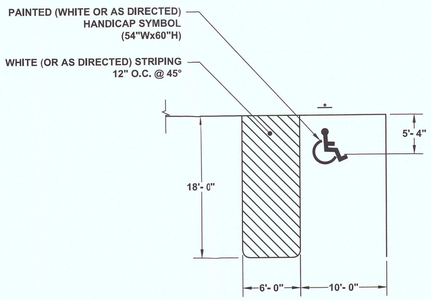

NOTE:
1. ALL STRIPING AND MARKINGS WITHIN THE PARKING LOT SHALL BE INCLUDED IN THE UNIT PRICE ITEM "TRAFFIC STRIPES, 4" WHITE LONG LIFE".

PARKING LOT STRIPING DETAIL
N.T.S.

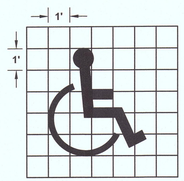

HANDICAP SYMBOL
N.T.S.

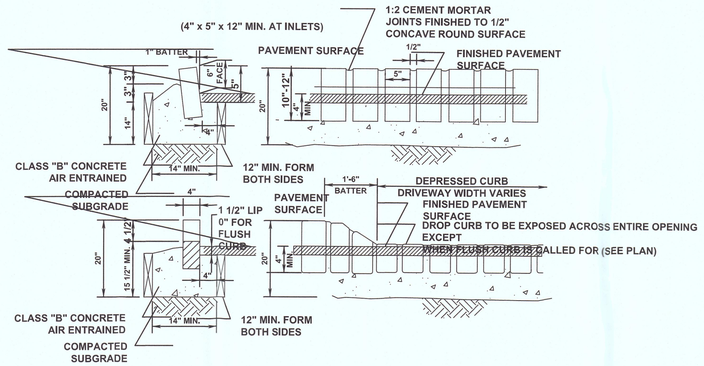

BELGIUM BLOCK CURB DETAIL
N.T.S.

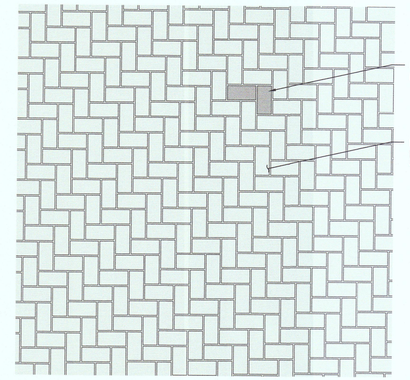

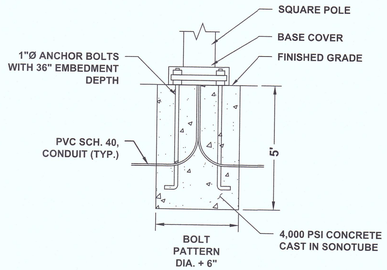

LIGHT POLE FOUNDATION DETAIL
N.T.S.

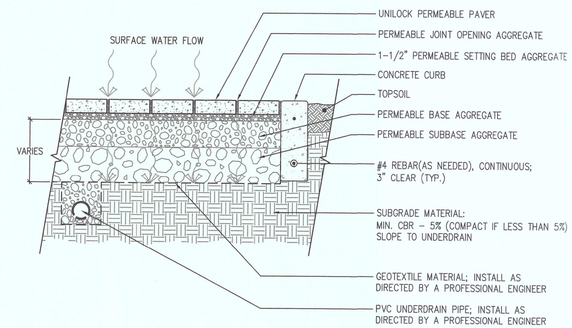

NOTES:
1. PERMEABLE PAVERS SHALL BE ECO-PRIORIA II BY UNILOCK, TEL. 1800.UNILOCK.
2. COLOR SHALL BE SIERRA.

PERMEABLE PAVER DETAIL
N.T.S.

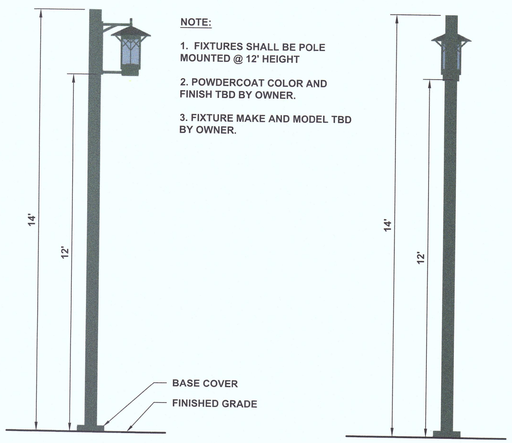

NOTE:
1. FIXTURES SHALL BE POLE MOUNTED @ 12' HEIGHT
2. POWDERCOAT COLOR AND FINISH TBD BY OWNER.
3. FIXTURE MAKE AND MODEL TBD BY OWNER.

LIGHT POLE DETAIL
N.T.S.

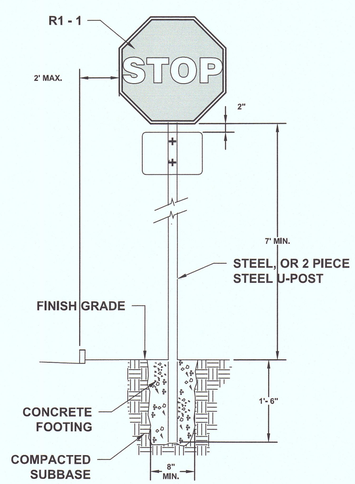

NOTE: IN COUNTY ROAD R.O.W. STOP SIGNS SHALL BE VIP SHEETING AND TELSPAR BREAKAWAY SIGN POSTS.

NOTE: ONE (1) POST REQUIRED AT WEIGHT OF 2.5 LBS./FT. OF 1 PIECE OR 2 PIECE STEEL

STOP SIGN
N.T.S.

GENERAL NOTES :
1. ALL POSTS SHALL BE OF ADEQUATE LENGTH TO MEET THE REQUIREMENTS FOR ERECTION AS STATED IN THE CURRENT "MANUAL ON UNIFORM TRAFFIC CONTROL DEVICES FOR STREETS AND HIGHWAYS."
2. TWO PIECE STEEL U-POST SHALL BE EMBEDDED 3'-8" MINIMUM ONE PIECE STEEL U-POSTS SHALL BE EMBEDDED 3'-6" MAXIMUM
3. ALL STEEL POSTS AND BRACKETS SHALL BE CUT, BENT AND HOLES PUNCHED AND DRILLED BEFORE GALVANIZING. GALVANIZING SHALL BE IN CONFORMANCE WITH CURRENT ATSM A123.
4. POSTS MAY BE STEEL OR 2 PIECE STEEL U-POST IN CONFORMANCE WITH THE NOTES BELOW.
5. SIGN PANEL SIZES SHALL DETERMINE POST TYPE AND NUMBER AS SHOWN IN THIS DETAIL.
6. BOLTS SHALL NOT PROTRUDE MORE THAN 3/4" BEYOND THE NUT WHEN TIGHT BUT SHALL ENGAGE ALL THREADS IN THE NUT.
7. THE MINIMUM VERTICAL CLEARANCE REQUIREMENTS FOR SIGNS ARE: EDGE OF PAVEMENT TO BOTTOM OF SIGN SHALL BE IN ACCORDANCE WITH THE CURRENT "MANUAL ON UNIFORM TRAFFIC CONTROL DEVICES FOR STREETS AND HIGHWAYS." GROUNDLINE TO BOTTOM OF SIGN SHALL BE 7' MINIMUM. FOR SINGLE POST INSTALLATIONS, THE MINIMUM DISTANCE FROM GROUNDLINE TO THE TOP OF SIGN MUST BE 9'. THE FINAL HEIGHT OF ALL SIGNS MUST MEET OR EXCEED ALL OF THE ABOVE REQUIREMENTS.
8. PERMANENT SIGN SUPPORTS SHALL NOT BE INSTALLED ON SLOPES GREATER THAN 10:1, UNLESS BEHIND A TRAFFIC BARRIER, AND THE SLOPE SHALL EXTEND A MINIMUM OF ON METER BEYOND THE OUTSIDE EDGE OF SIGN (SEE GRADING DETAIL FOR SLOPE TREATMENT).
9. EXTRUDED ALUMINUM SIGN PANELS ARE NOT PERMITTED FOR USE WITH U-POST SIGN SUPPORTS.
10. U-POST SIGN SUPPORTS SHALL NOT BE PLACED IN FRONT OF GUIDE RAIL AND THE POSTS MUST NOT STRADDLE GUIDE RAIL. 11 TO EXTEND THE HEIGHT OF A SIGN POST, A MAXIMM OF ONE SPLICE MAY BE MADE AND MUST BE A MINIMUM OF 9' FROM THE GROUNDLINE TO CENTER LINE OF SPLICE.

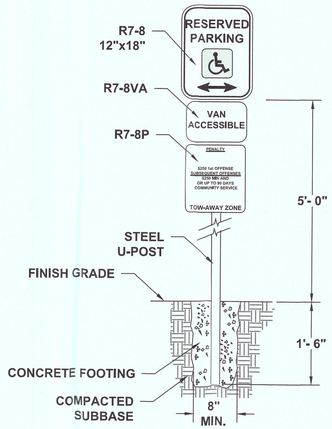

NOTES:
1. SIGN POSTS SHALL ALL BE GALVANIZED.
2. ALL PROPOSED SIGNING SHALL FOLLOW MUTCD STANDARDS.
3. ALL PROPOSED SIGN LOCATIONS SHALL BE SUBJECT TO ENGINEER'S APPROVAL.

ADA PARKING SIGN
N.T.S.

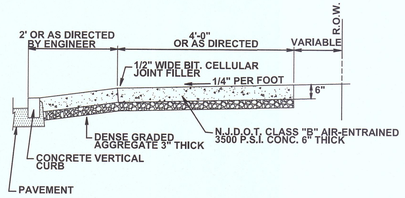

GENERAL NOTES:
1. SUBBASE SHALL BE COMPACTED TO THE SATISFACTION OF THE ENGINEER.
2. EXPANSION JOINTS OF 1/2" WIDE BITUMINOUS CELLULAR TYPE JOINT FILLER WILL BE PROVIDED EVERY 12'.
3. LONGITUDINAL JOINTS, 1/4" WIDE, SHALL BE PROVIDED BETWEEN CURBS AND ABUTTING SIDEWALKS AND SHALL BE FILLED WITH PREMOLDED BITUMINOUS TYPE JOINT FILLER.
4. TRANSVERSE SURFACE GROOVES SHALL BE CUT IN SIDEWALKS BETWEEN EXPANSION JOINTS AT INTERVALS EQUAL TO THE SIDEWALK WIDTH.
5. ALL CONCRETE SHALL BE CLASS "B" AIR ENTRAINED.
6. ALL JOINTS AND EDGES ARE TO BE TOOLED.
7. SURFACE SHALL BE BRUSHED TRANSVERSELY TO A NEAT FINISH.
8. STANDARD CONCRETE SIDEWALK MEETS N.J.D.O.T. STANDARDS.

CONCRETE DRIVEWAY, 6" THICK
N.T.S.

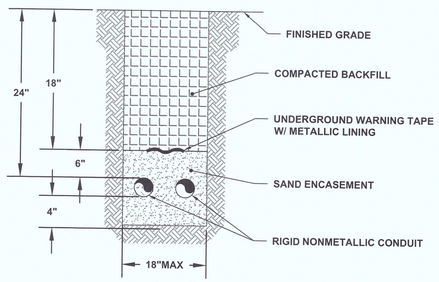

TRENCH DETAIL
SCHEDULE 40 PVC CONDUIT FOR ELECTRICAL WIRING
N.T.S.

NOTICE
THIS DRAWING AND ALL INFORMATION CONTAINED HEREIN IS AUTHORIZED FOR USE ONLY BY THE PARTY FOR WHOM THE WORK WAS CONTRACTED OR TO WHOM IT IS CERTIFIED.
THIS DRAWING MAY NOT BE COPIED, REUSED, DISCLOSED, DISTRIBUTED, OR RELIED UPON FOR ANY OTHER PURPOSE WITHOUT THE WRITTEN CONSENT OF SUBURBAN CONSULTING ENGINEERS, INC.
PER N.J.A.C. ELECTRONIC SUBMISSIONS NOT CONTAINING A VALID DIGITAL SEAL OR PAPER COPIES NOT CONTAINING A RAISED SEAL ARE NOT ORIGINALS AND MAY HAVE BEEN ALTERED.
© COPYRIGHT 2020 SUBURBAN CONSULTING ENGINEERS, INC.™
ALL RIGHTS RESERVED

DESCRIPTION	NO.	DATE:	BY:	CHK:
REVISED PER RECEIVED COMMENTS	A	08/21/2020	--	--

REVISIONS

DRAWN BY: CVF 05/14/2020
CHECKED BY: CJS 05/14/2020
CHECKED BY:

DAREN J. PHIL, PE
NJ PROFESSIONAL ENGINEER
LICENSE NO. 24GE03613100

DATE: 05/14/2020

SUBURBAN CONSULTING ENGINEERS, INC.
COA NO: 24GA28037500 24GB00000400
- Civil Engineers - Municipal Engineers -
- Landscape Architects -
- Planners - Environmentalists - Land Surveyors -
96 US Highway 206, Suite 101 Flanders, N.J. 07836 - 973.398.1776
2430 Highway 34, Bldg. A Suite 1R Wall, N.J. 08736 - 732.282.1776
EXCELLENCE ♦ ECONOMY ♦ ENVIRONMENT

PRELIMINARY AND FINAL MAJOR SITE PLAN FOR PARK VALLEY DEVELOPMENT
No. 4 COMMUNITY PLACE, BLOCK 1501 LOT 4
BOROUGH OF MADISON, COUNTY OF MORRIS, STATE OF NEW JERSEY

CONSTRUCTION DETAILS

PROJECT NUMBER: SCE-11521.011
SCALE: AS NOTED
SHEET 9 OF 10
REVISION A

E:\SCE\Madison\11521 Madison\11521.011 4 Community Place\Sheets\11521.011 9-10 Construction Details.Ldwg Fri, Aug 21, 2020 - 3:41pm kdana SUBURBAN CONSULTING ENGINEERS, INC.